California Polytechnic State University Pomona
DEPARTMENT OF ELECTRICAL & COMPUTER ENGINEERING

Digital Logic Design Laboratory

ECE 2300L

Report #7 Experiment 10A/B

4-Bit Signed Full Adder/Subtractor

Prepared by

Kevyn Santos & Yanming Feng

Presented to

Dr. Yazdy R Mostafa

November 16, 2023

Introduction:

In this lab, our objective is to design, implement, and test a 4-bit signed adder using a minimum number of full adders.

Pre-Lab:

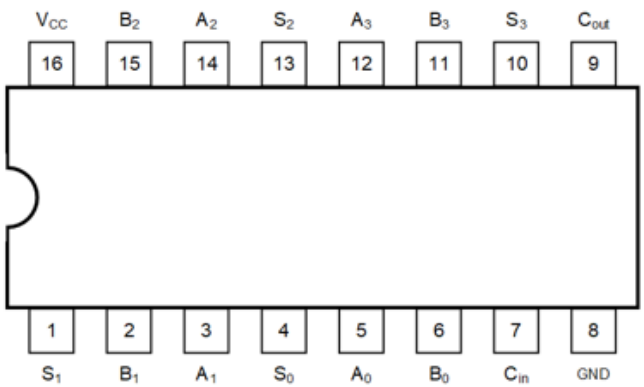

<u>Pinout and Datasheet for (74283):</u>
This chip has a carry in input and a carry out input, their purposes are to accept a carry from another 4 bit adder. In our case we need it for the SIGN bit, so we can put an LED and know if our number is positive or negative. The A and B inputs are for you to set up your BCD numbers so the chip can add them. The different sum outputs equate to 1 or 0 depending on if there is a carry or not in each part of the addition.

Pin Names	Description	Function of Chip
$A_0 - A_3$	A operand inputs	It adds two 4-bit binary words (A + B) plus the incoming carry (C). The binary sum appears on the Sum (S0–S3) and outgoing carry (C4) outputs.
$B_0 - B_3$	B operand inputs	
C_0	Carry input	
$S_0 - S_3$	Sum outputs	
C_4	Carry output	

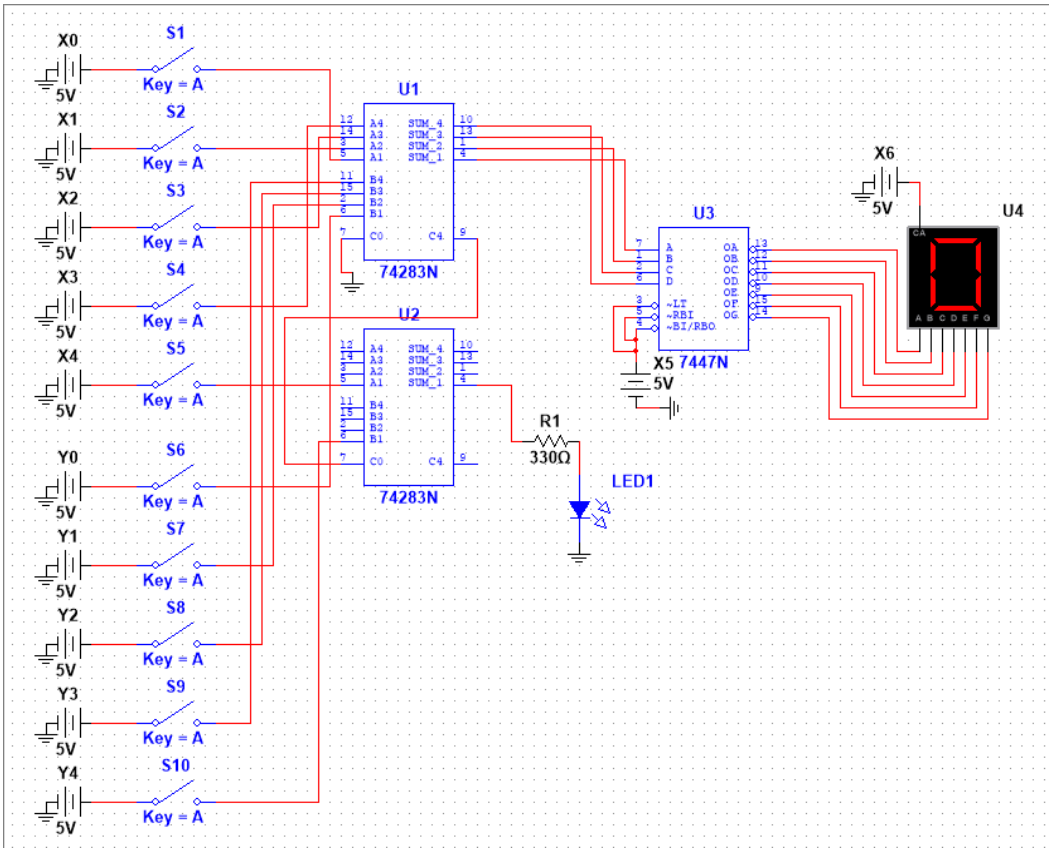
X0
X1
X2
X3
X4
Y0
Y1
Y2
Y3
Y4
5V
S1
S2
S3
S4
S5
S6
S7
S8
S9
S10
Key = A
U1
U2
74283N
U3
7447N
X5
X6
U4
R1
330Ω
LED1

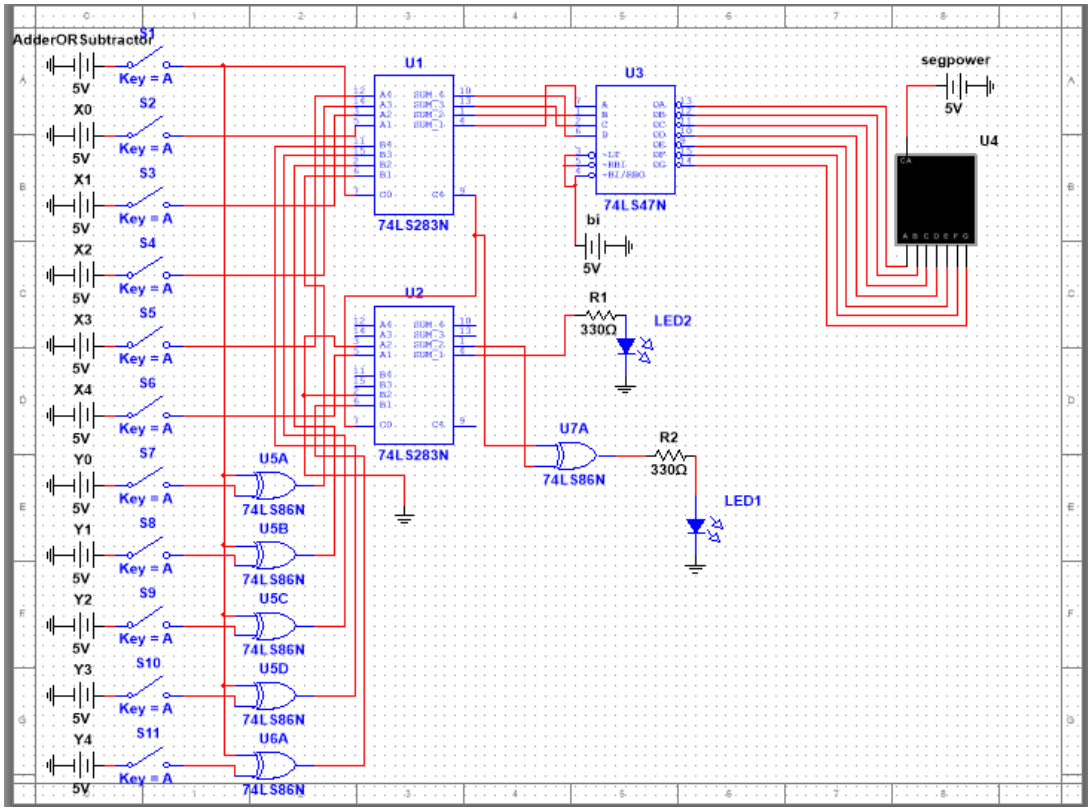
AdderORSubtractor
X0
X1
X2
X3
X4
Y0
Y1
Y2
Y3
Y4
5V
S1
S2
S3
S4
S5
S6
S7
S8
S9
S10
S11
Key = A
U1
U2
74LS283N
U3
74LS47N
bi
segpower
U4
R1
330Ω
LED2
U7A
74LS86N
R2
LED1
U5A
U5B
U5C
U5D
U6A

Procedure:

Figure 1 shows input X on left (BCD 01001 is 9) adding input Y on right (BCD 00011 is 12) is overflow

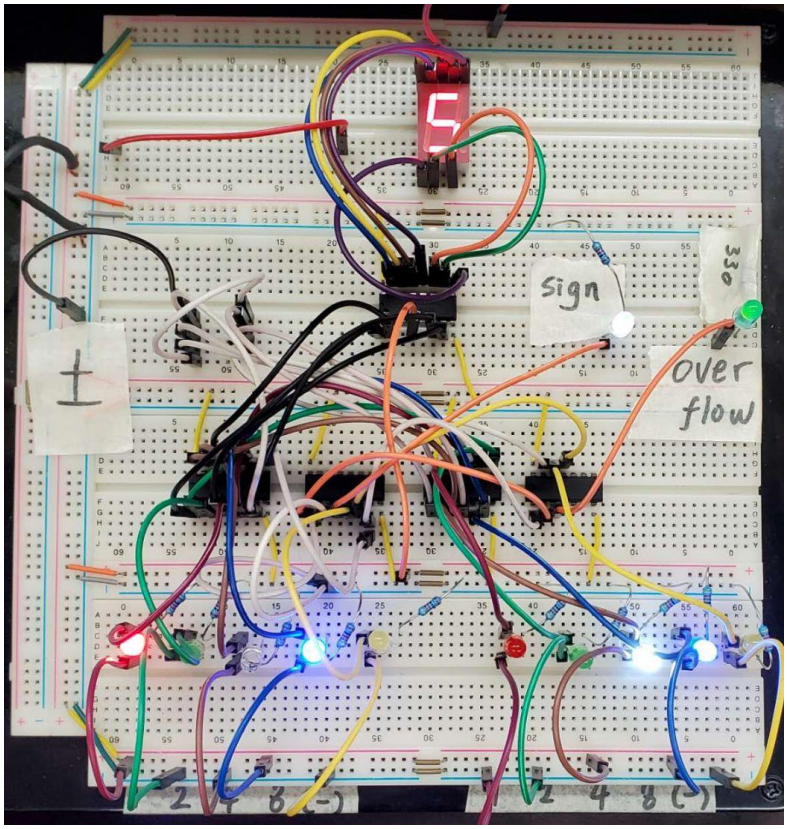

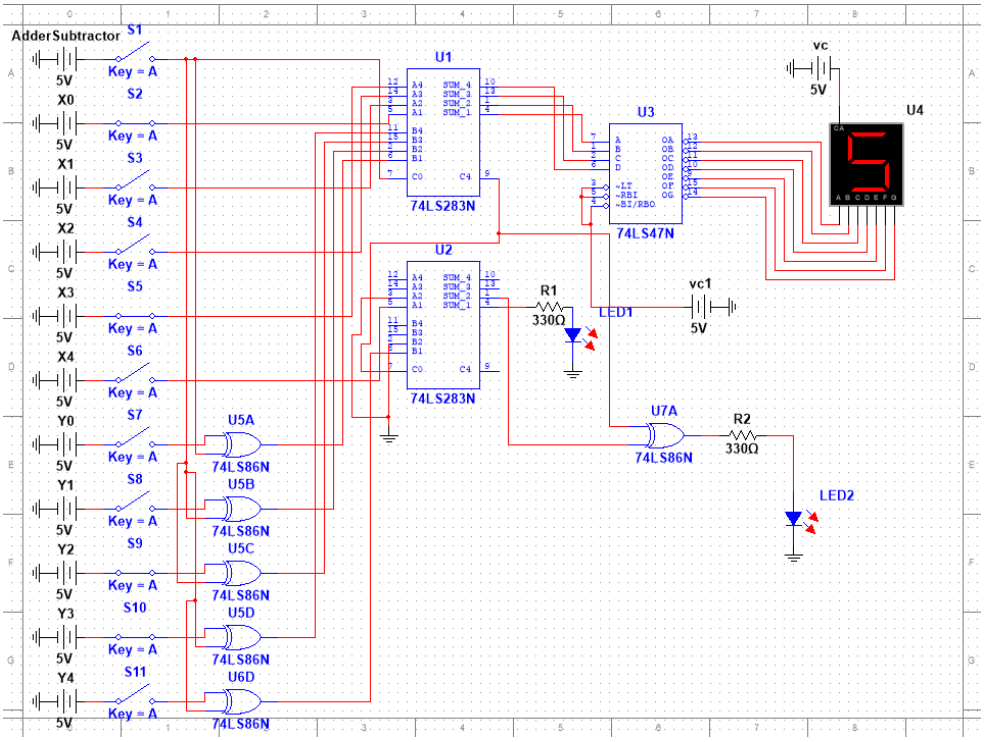

Figure 2 shows input X on left (BCD 01001 is 9) adding input Y on left (BCD 11110 is -2) equal to 7

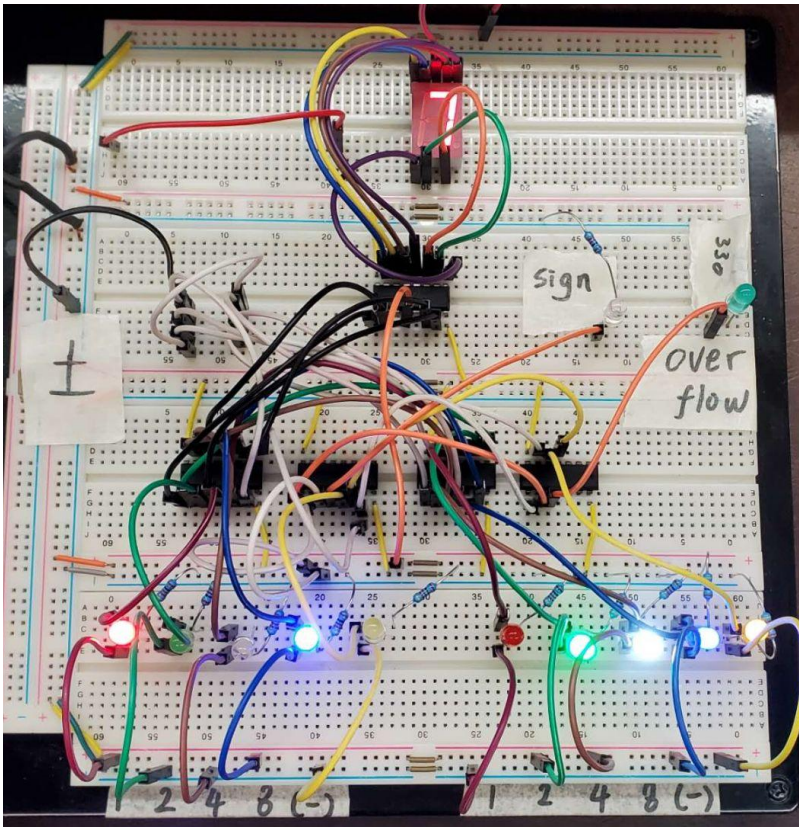

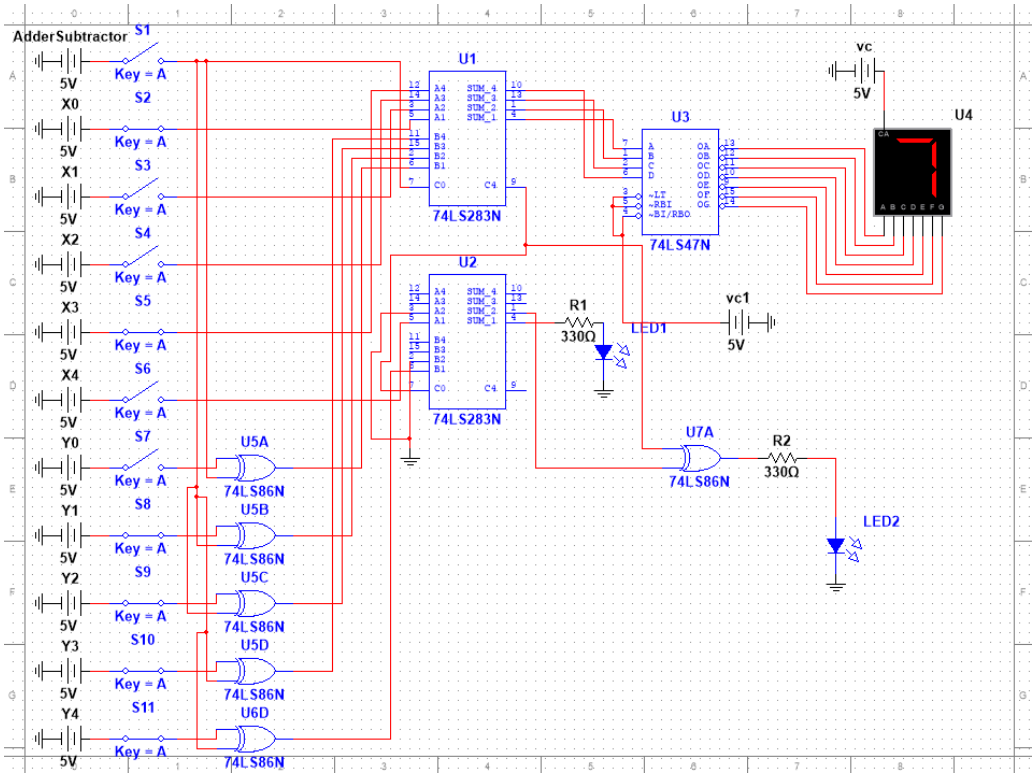

Figure 3 shows input X on left (BCD 00100 is 4) subtracting input Y on left (BCD 11100 is -4) is 8

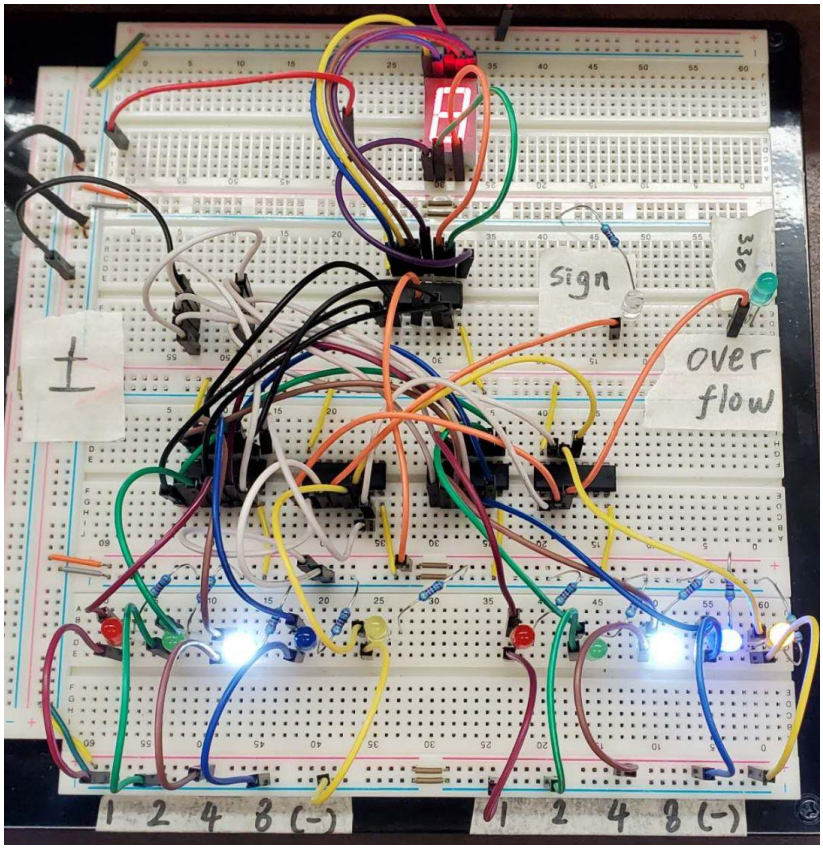

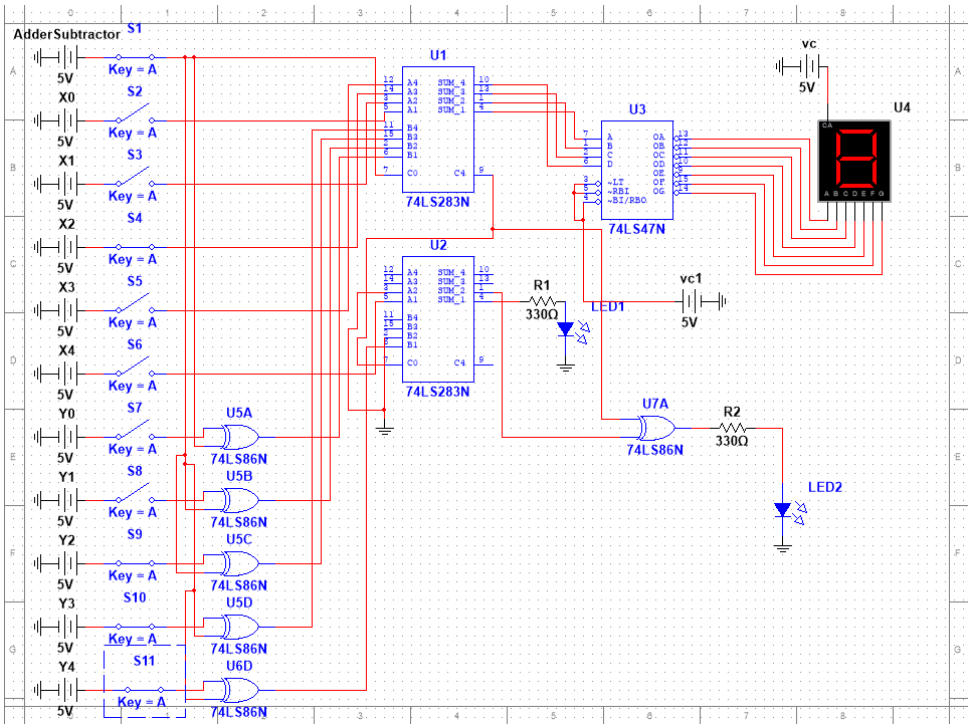

Figure 3 shows input X on left (BCD 01001 is 9) subtracting input Y on left (BCD 00100 is 4) equal to 5

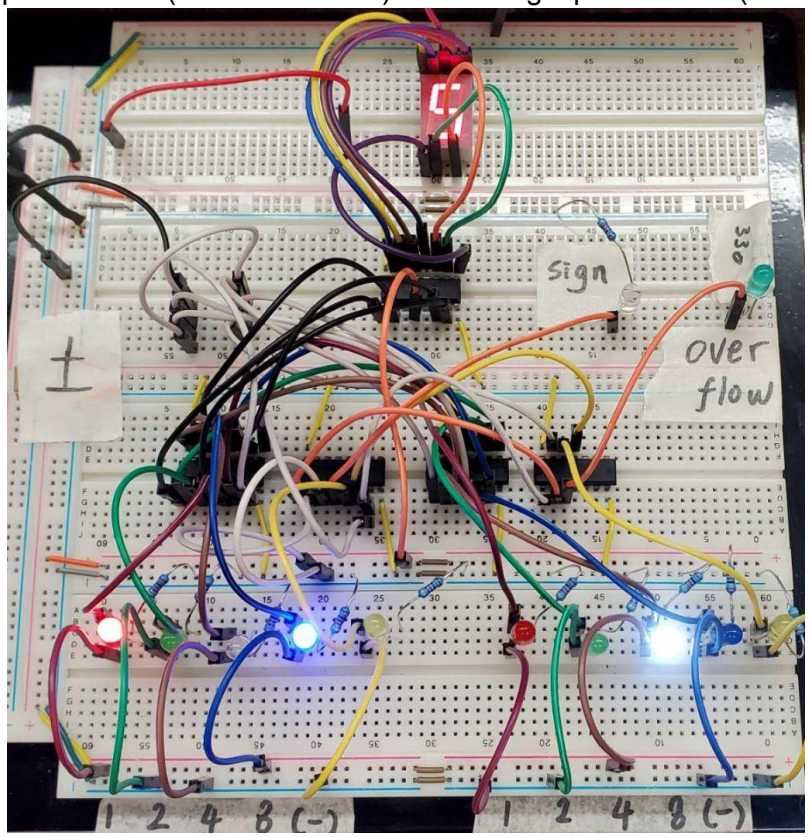

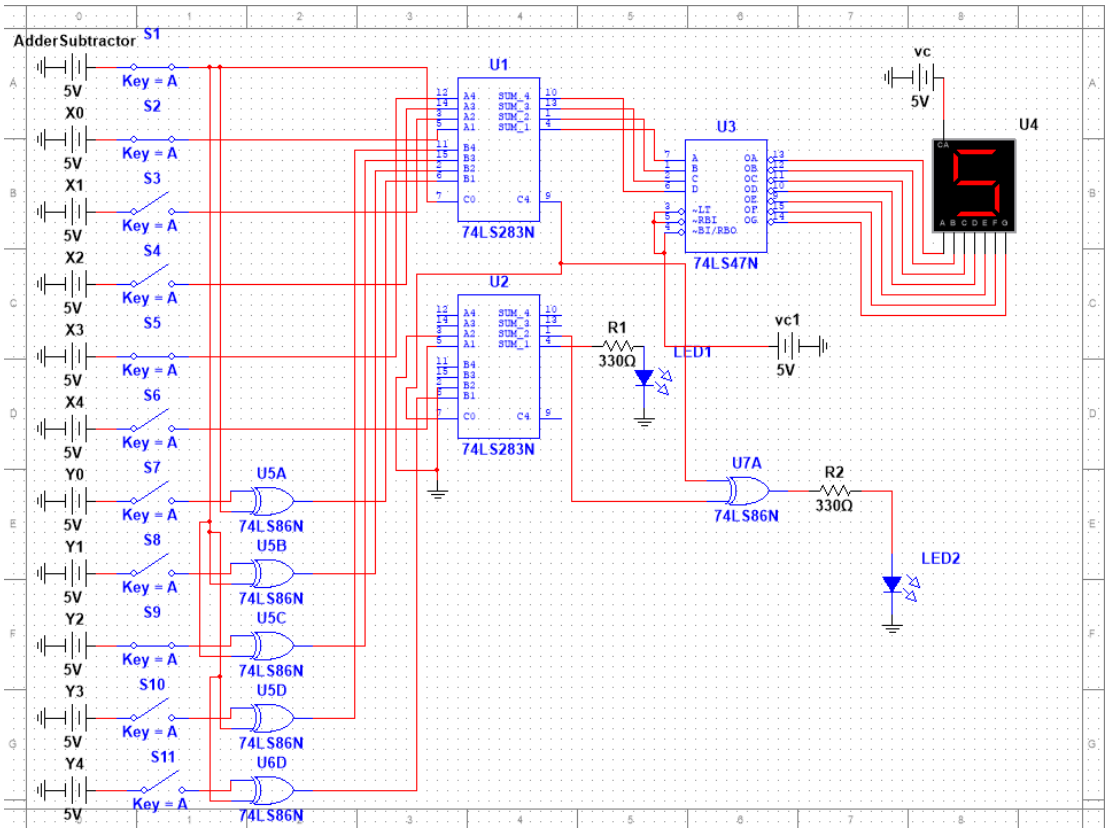

Figure 3 shows input X on left (BCD 00100 is 4) adding input Y on left (BCD 00101 is 5) is 9

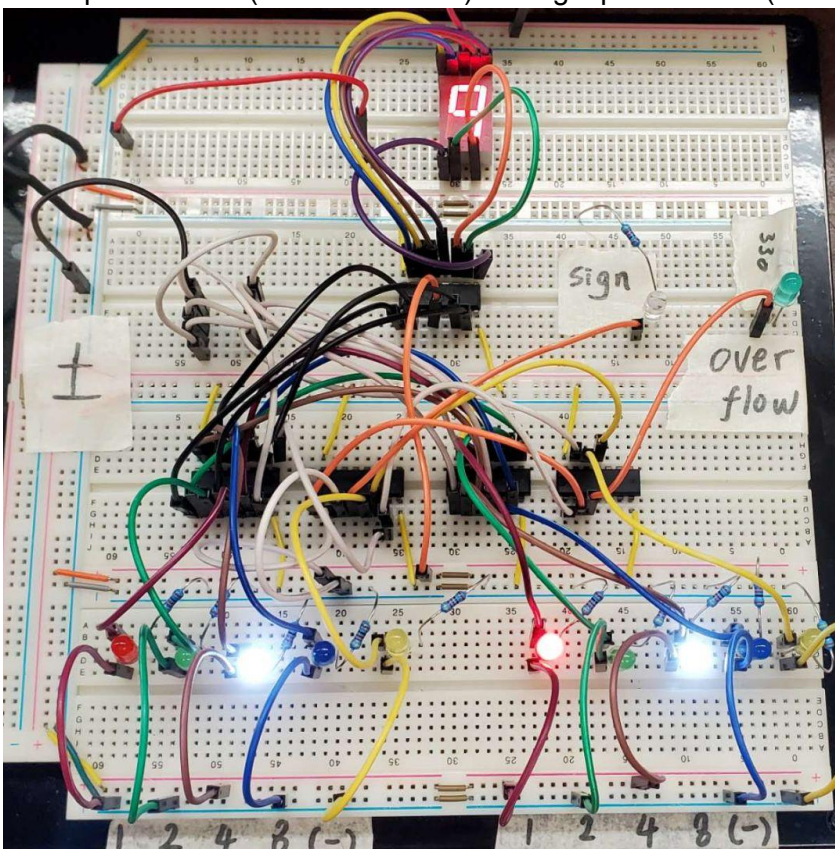

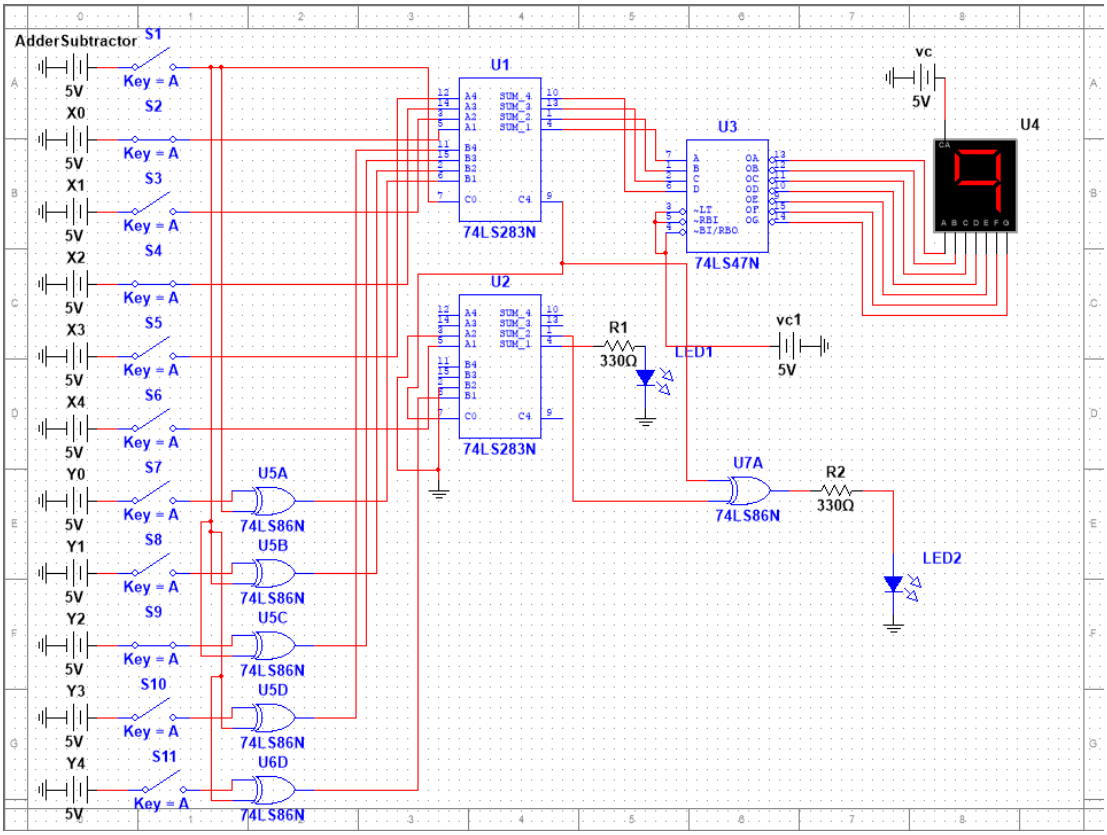

Conclusion:

In the course of this laboratory session, we were able to complete our objectives which was to demonstrate the circuit of both an adder and subtractor within a single circuit by changing a sign bit. Also the indicator light successfully activated when the calculation of 'X' and 'Y' resulted in overflow, exceeding the numerical range of 9.